Class X Session 2026-27
Subject - Mathematics (Standard)
Sample Question Paper - 3

Time Allowed: 3 hours **Maximum Marks: 80**

General Instructions:

Read the following instructions carefully and follow them:

1. This question paper contains 38 questions.
2. This Question Paper is divided into 5 Sections A, B, C, D and E.
3. In Section A, Questions no. 1-18 are multiple choice questions (MCQs) and questions no. 19 and 20 are Assertion- Reason based questions of 1 mark each.
4. In Section B, Questions no. 21-25 are very short answer (VSA) type questions, carrying 02 marks each.
5. In Section C, Questions no. 26-31 are short answer (SA) type questions, carrying 03 marks each.
6. In Section D, Questions no. 32-35 are long answer (LA) type questions, carrying 05 marks each.
7. In Section E, Questions no. 36-38 are case study-based questions carrying 4 marks each with sub-parts of the values of 1,1 and 2 marks each respectively.
8. All Questions are compulsory. However, an internal choice in 2 Questions of Section B, 2 Questions of Section C and 2 Questions of Section D has been provided. An internal choice has been provided in all the 2 marks questions of Section E.
9. Draw neat and clean figures wherever required.
10. Take $\pi = 22/7$ wherever required if not stated.
11. Use of calculators is not allowed.

Section A

1. If the HCF of 65 and 117 is expressible in the form 65m – 117, then the value of 'm' is **[1]**

   a) 1 b) 4

   c) 3 d) 2

2. A prime number has: **[1]**

   a) exactly two prime factors b) exactly one prime factor

   c) at least two prime factors d) at least one prime factor

3. By a reduction of Re.1 per kg in the price of sugar, Radha can buy one kg sugar more for Rs.56. The original price of 1 kg of sugar is **[1]**

   a) Rs.7 b) Rs.9

c) Rs.6 d) Rs.8

4. ₹ 9,000 were divided equally among a certain number of persons. If there been 20 more persons, each would have got ₹ 160 less. Find the original number of persons. **[1]**

a) 24 b) 25

c) 26 d) 27

5. If the equation $9x^2 + 6kx + 4 = 0$ has equal roots, then the roots are both equal to **[1]**

a) 0 b) ± 3

c) $\pm\frac{2}{3}$ d) $\pm\frac{3}{2}$

6. If $\left(\frac{a}{2}, 4\right)$ is the midpoint of the line segment joining the points A (-6 ,5) and B(-2, 3) then the value of a is **[1]**

a) 4 b) -8

c) -4 d) 3

7. In the given figure, in $\triangle PQR, ST \| QR$. If $PS = 16\ mm$ and $PQ = 40\ mm$, then PT : TR is: **[1]**

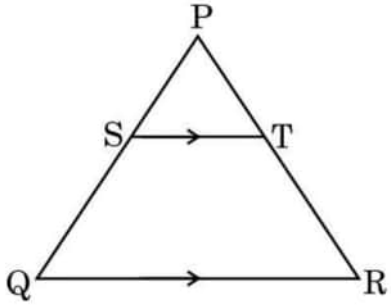

a) 2 : 5 b) 3 : 2

c) 5 : 2 d) 2 : 3

8. In the adjoining figure if exterior $\angle EAB = 110^0, \angle CAD = 35^0$, AB = 5cm, AC = 7cm and BC = 3cm, then CD is equal to **[1]**

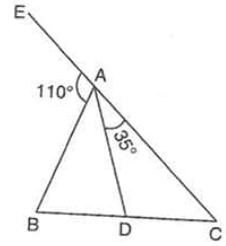

a) 2 cm. b) 1.75 cm.

c) 1.9 cm. d) 2.25 cm.

9. In Figure, if AD, AE and BC are tangents to the circle at D, E and F respectively. Then, **[1]**

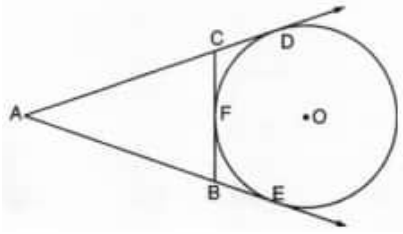

a) 4AD = AB + BC + CA

b) AD = AB + BC + CA

c) 2AD = AB + BC + CA

d) 3AD = AB + BC + CA

10. If $2\cos 3\theta = 1$ then θ= ? **[1]**

a) 15°

b) 10°

c) 30°

d) 20°

11. The tops of two poles of height 16 m and 10 m are connected by a wire of length/meters. If the wire makes an angle of 30° with the horizontal, then l = **[1]**

a) 10

b) 26

c) 12

d) 16

12. The value of $\sin^6 A + \cos^6 A + 3\cos^2 A \sin^2 A$ is **[1]**

a) 1

b) – 1

c) 2

d) 0

13. If a chord of a circle of radius 28 cm makes an angle of 90° at the centre, then the area of the major segment is **[1]**

a) 2240 cm^2

b) 1456 cm^2

c) 392 cm^2

d) 1848 cm^2

14. O is the centre of a circle of diameter 4 cm and OABC is a square, if the shaded area is $\frac{1}{3}$ area of the square, then the side of the square is _____. **[1]**

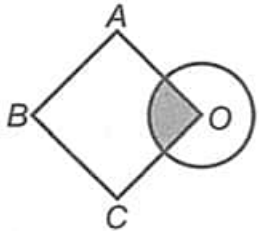

a) $\pi\sqrt{3}$ cm

b) $\sqrt{3\pi}$ cm

c) 3π cm

d) $3\sqrt{\pi}$ cm

15. A child's game has 8 triangles of which 5 are blue and rest are red and 10 squares of which 6 are blue and the rest are red. One piece is lost at random. The probability that it is a square of blue colour is **[1]**

a) $\frac{2}{3}$

b) $\frac{4}{9}$

c) $\frac{1}{3}$

d) $\frac{6}{10}$

16. If the mean of first n natural numbers is $\frac{5n}{9}$ then the value of n is: **[1]**

a) 5

b) 10

c) 9

d) 4

17. A cylindrical tub of radius 5 cm and height 9.8 cm is full of water. A solid in the form of a right circular cone mounted on a hemisphere is immersed into the tub. If the **[1]**

radius of the hemisphere is 3.5 cm and the height of the cone outside the hemisphere is 5 cm, then find the volume of water left in the tub. (Take $\pi = \frac{22}{7}$)

a) 716 cm^3 b) 600 cm^3

c) 616 cm^3 d) 535 cm^3

18. If $\sum f_i u_i = 29$, $\sum f_i = 30$, a = 47.5 and h = 15, then the value of $\bar{x}$ is **[1]**

a) 63 b) 62

c) 26 d) 64

19. **Assertion (A):** The point (-1, 6) divides the line segment joining the points (-3, 10) and (6, -8) in the ratio 2 : 7 internally. **[1]**

Reason (R): Three points A, B and C are collinear if area of $\triangle$ABC = 0.

a) Both A and R are true and R is the correct explanation of A. b) Both A and R are true but R is not the correct explanation of A.

c) A is true but R is false. d) A is false but R is true.

20. **Assertion (A):** For two prime numbers x and $y(x < y)$, $\text{HCF}(x, y) = x$ and $\text{LCM}(x, y) = y$. **[1]**

Reason (R): $\text{HCF}(x, y) \leq \text{LCM}(x, y)$, where x, y are any two natural numbers.

a) Both A and R are true and R is the correct explanation of A. b) Both A and R are true but R is not the correct explanation of A.

c) A is true but R is false. d) A is false but R is true.

Section B

21. On comparing the ratios $\frac{a_1}{a_2}$, $\frac{b_1}{b_2}$ and $\frac{c_1}{c_2}$, find out whether the lines representing the pair of linear equations intersect at a point, are parallel or coincide: $6x - 3y + 10 = 0$; $2x - y + 9 = 0$. **[2]**

22. P is a point on the side BC of $\triangle ABC$ such that $\angle APC = \angle BAC$. Prove that $AC^2 = BC \cdot CP$. **[2]**

OR

In the given figure, PQR is a triangle in which PS and QT are altitudes from P and Q respectively, intersecting each other at M. Prove that $\Delta QSM \sim \Delta PTM$.

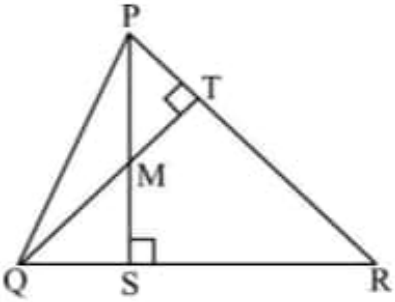

23. Prove that in two concentric circles, the chord of the larger circle, which touches the smaller circle is bisected at the point of contact. **[2]**

24. If x = 3 sinθ + 4 cosθ and y = 3 cosθ – 4 sinθ then prove that $x^2 + y^2 = 25$. **[2]**

25. A car has two wipers which do not overlap. Each wiper has a blade of length 25cm sweeping through an angle of 115°. Find the total area cleaned at each sweep of the **[2]**

blades.

OR

The areas of two sectors of two different circles are equal. Is it necessary that their corresponding arc lengths are equal? Why?

Section C

26. There is a circular path around a sports field. Sonia takes 18 minutes to drive one round of the field, while Ravi takes 12 minutes for the same. Suppose they both start at the same point and at the same time and go in the same direction. After how many minutes will they meet again at the starting point? **[3]**

27. Point A lies on the line segment PQ joining P(6, -6) and Q (-4, -1) in such a way that $\frac{PA}{PQ} = \frac{2}{5}$. If the point A also lies on the line 3x + k(y + 1)=0, find the value of k. **[3]**

28. The ratio of incomes of two persons is 9 : 7 and the ratio of their expenditures is 4 : 3. If each of them manages to save ₹ 2000 per month, then find their monthly incomes. **[3]**

OR

Half of the difference between two numbers is 2. The sum of the greater number and twice the smaller number is 13. Find the numbers.

29. In Figure, XY and X'Y' are two parallel tangents to a circle with centre O and another tangent AB with point of contact C intersects XY at A and X'Y' at B. Prove that $\angle AOB$ = 90°. **[3]**

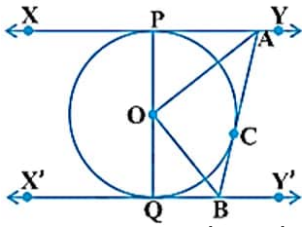

30. Prove that $\frac{\sin\theta - \cos\theta + 1}{\sin\theta + \cos\theta - 1} = \frac{1}{\sec\theta - \tan\theta}$, using identity $sec^2\theta = 1 + tan^2\theta$. **[3]**

OR

Prove that:

$\frac{\tan\theta + \sec\theta - 1}{\tan\theta - \sec\theta + 1} = \frac{1 + \sin\theta}{\cos\theta}$

31. There are 100 cards in a bag on which numbers from 1 to 100 are written. A card is taken out from the bag at random. Find the probability that the number on the selected card **[3]**

i. is divisible by 9 and is a perfect square.

ii. is a prime number greater than 80.

Section D

32. Find the smallest value of p for which the quadratic equation $x^2 - 2(p+1)x + p^2 = 0$ has real roots. Hence, find the roots of the equation so obtained. **[5]**

OR

If the roots of the quadratic equation $\left(c^2 - ab\right)x^2 - 2\left(a^2 - bc\right)x + b^2 - ac = 0$ in x are equal then show that either a = 0 or $a^3 + b^3 + c^3 = 3abc$

33. The angle of elevation of the top of a building from a point A on the ground is 30°. On moving a distance of 30 m towards its base to the point B, the angle of elevation **[5]**

changes to 45°. Find the height of the building and the distance of its base from point A. (Use $\sqrt{3}$ = 1.732)

34. Solve the equation: **[5]**

-4 + (-1) + 2 + 5 + ... + x = 437.

OR

Find the sum of all integers from 1 to 500 which are multiples of 2 or 5. [hint: These numbers will be : multiples of 2 + multiples of 5 – multiples of 2 as well as of 5]

35. The following table gives the distribution of the life time of 400 neon lamps: **[5]**

Lite time (in hours)	**Number of lamps**
1500-2000	14
2000-2500	56
2500-3000	60
3000-3500	86
3500-4000	74
4000-4500	62
4500-5000	48

Find the median life time of a lamp.

Section E

36. **Read the following text carefully and answer the questions that follow:** **[4]**

Aashish and his family went for a vacation to Manali. There they had a stay in tent for a night. Aashish found that the tent in which they stayed is in the form of a cone surmounted on a cylinder. The total height of the tent is 42 m, diameter of the base is 42 m and height of the cylinder is 22 m.



i. What is curved surface area of cone? (1)

ii. If each person needs 126 m^2 of floor, then how many persons can be accommodated in the tent? (1)

iii. What is the curved surface area of cylinder? (2)

OR

How much canvas required to make a tent? (2)

37. **Read the following text carefully and answer the questions that follow:** **[4]**

An object which is thrown or projected into the air, subject to only the acceleration of gravity is called a projectile, and its path is called its trajectory. This curved path was shown by Galileo to be a parabola. Parabola is represented by a polynomial. If the

polynomial to represent the distance covered is,

$p(t) = -5t^2 + 40t + 1.2$

i. What is the degree of the polynomial $p(t) = -5\ t^2 + 40t + 1.2$? (1)

ii. What is the height of the projectile at the time of 4 seconds after it is launched? (1)

iii. What is the name of the polynomial $p(t) = -5t^2 + 40t + 1.2$ that is classified based on its degree? (2)

OR

What are the factors of the given quadratic equation $p(x) = x^2 - 5x + 6$? (2)

38. **Read the following text carefully and answer the questions that follow:** **[4]**

Observe the figures given below carefully and answer the questions:

Figure A

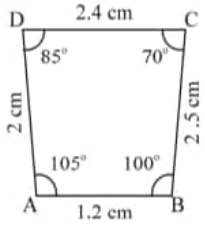

A (i)

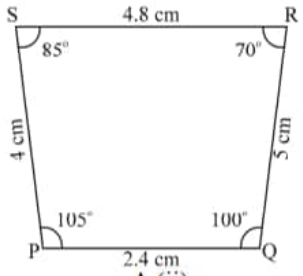

A (ii)

Figure B

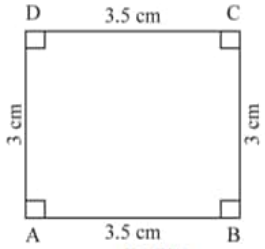

B (iii)

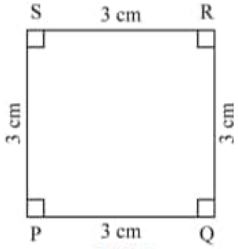

B (iv)

Figure C

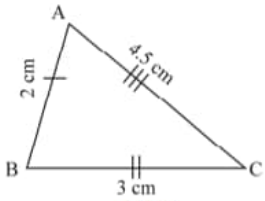

C (v)

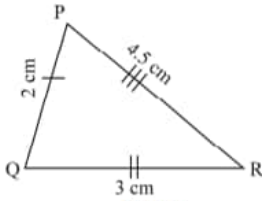

C (vi)

i. Name the figure(s) where in two figures are similar. (1)

ii. Name the figure(s) wherein the figures are congruent. (1)

iii. Prove that congruent triangles are also similar but not the converse. (2)

OR

What more is least needed for two similar triangles to be congruent? (2)

Solution

Section A

1.

(d) 2

Explanation:

First, find the HCF of 65 and 117

117 = 65 × 1 + 52

65 = 52 × 1 + 13

52 = 13 × 4 + 0 (zero remainder)

Therefore, HCF (117 , 65) is 13

Now,

∴ 65m – 117 = 13

⇒ 65m = 13 + 117

⇒ 65m = 130

⇒ m = 2

2.

(b) exactly one prime factor

Explanation:

exactly one prime factor

3.

(d) Rs.8

Explanation:

Let the original price of 1 kg sugar = Rs. x

∴ In Re. 1, the weight of sugar can be bought = $\frac{1}{x}$ kg

∴ In Rs. 56, the weight of sugar can be bought = $\frac{56}{x}$ kg

New price = Rs. (x - 1)

∴ In Rs. 56, the weight of sugar can be bought = $\frac{56}{x-1}$ kg

According to question, $\frac{56}{x-1} - \frac{56}{x} = 1$

⇒ $\frac{56x-56x+56}{x(x-1)}$ = 1

⇒ $\frac{56}{x^2-x}$ = 1

⇒ x^2 - x - 56 = 0

⇒ x^2 - 8x + 7x - 56 = 0

⇒ x(x - 8) +7(x - 8) = 0

⇒ (x + 7)(x - 8) = 0

⇒ x + 7 = 0 and x - 8 = 0

⇒ x = -7 and x = 8 [x = -7 is not possible]

Therefore, the original price of 1 kg of sugar is Rs. 8

4.

(b) 25

Explanation:

25

5.

(c) $\pm\frac{2}{3}$

Explanation:

In the equation

$9x^2 + 6kx + 4 = 0$

a = 9, b = 6k, c = 4 then

$D = b^2 - 4ac$

$= (6k)^2 - 4 \times 9 \times 4$

$= 36\ k^2 - 144$

$\because$ Roots are equal $\therefore$ D = 0

$\Rightarrow 36\ k^2 - 144 = 0 \Rightarrow 36\ k^2 = 144$

$\Rightarrow k^2 = \frac{144}{36} = 4 = (\pm 2)^2$

$\therefore k = \pm 2$

$\therefore$ Roots are $= \frac{-b}{2a} = \frac{\pm 2 \times 6}{2 \times 9} = \pm\frac{2}{3}$

6.

(b) -8

Explanation:

$\frac{a}{2} = \frac{(-6-2)}{3} = -4 \Rightarrow a = -8$

7.

(d) 2 : 3

Explanation:

2 : 3

8.

(b) 1.75 cm.

Explanation:

Here, $\angle BAD = 180^o - (\angle EAB + \angle ADC) = 180^o - 110^o - 35^o = 35^o$

Since, AD bisects $\angle A$.

$\therefore \frac{AB}{AC} = \frac{BD}{CD}$ [Internal bisector of an angle of a triangle divides the opposite side in the ratio of the sides containing the angle]

$\Rightarrow \frac{5}{7} = \frac{3-CD}{CD}$

$\Rightarrow 5CD = 21 - 7CD \Rightarrow 5CD + 7\ CD = 21$

$\Rightarrow 12CD = 21 \Rightarrow CD = 1.75$ cm

9.

(c) 2AD = AB + BC + CA

Explanation:

Since tangents from an external point of a circle are equal in length, therefore,

AD = AE, CD = CF and BE = BF

Now, 2AD = AD + AD = AD + AE

= (AC + CD) + (AB + BE)

$\Rightarrow$ 2AD = AC + AB + (CD + BE)

$\Rightarrow$ 2AD = AC + AB + (CF + BF)

$\Rightarrow$ 2AD = AC + AB + BC

10.

(d) 20°

Explanation:

$2\cos 3\theta = 1 \Rightarrow \cos 3\theta = \frac{1}{2} = \cos 60^\circ \Rightarrow 3\theta = 60^\circ \Rightarrow \theta = 20^\circ$

11.

(c) 12

Explanation:

Let AB and CD be the poles such that AB = 16 m and CD = 10 m.

The given information can be represented as

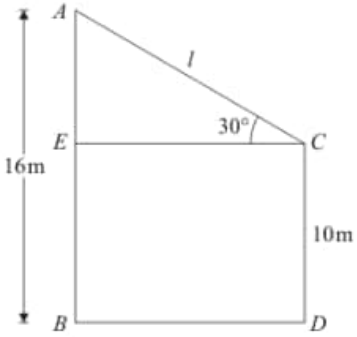

Here, AC is the length of wire which is l.

Also, AE = AB – BE = 16 m – 10 m = 6 m

We have to find the length of wire l.

So we use trigonometric ratios.

In triangle ACE,

$\sin C = \frac{AE}{EC}$

$\Rightarrow$ sin 30° = $\frac{6}{l}$

$\Rightarrow \frac{1}{2} = \frac{6}{l}$

$\Rightarrow$ l = 12

12. **(a)** 1

Explanation:

$\sin^6 A + \cos^6 A + 3\cos^2 A \sin^2 A$

$= (\sin^2 A)^3 + (\cos^2 A)^3 + 3\cos^2 A \sin^2 A$

$= (\sin^2 A + \cos^2 A)(\sin^4 A + \cos^4 A - \sin^2 A \cos^2 A + 3\cos^2 A \sin^2 A)$

$= (\sin^4 A + \cos^4 A + 2\cos^2 A \sin^2 A)$

$= (\sin^2 A + \cos^2 A)^2$

$= 1^2 = 1$

13. **(a)** 2240 cm^2

Explanation:

A chord AB makes an angle of 90° at the centre

Radius of the circle = 28 cm

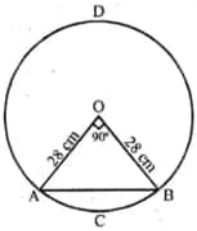

Area of minor segment ACB

$= \pi r^2 \times \frac{\theta}{360^\circ}$ - area of $\triangle AOB$

$= \pi r^2 \times \frac{90^\circ}{360^\circ} - \frac{1}{2}\text{OA} \times \text{OB}$

$= \frac{1}{4}\pi r^2 - \frac{1}{2} \times r^2$

$= \frac{1}{4} \times \frac{22}{7} \times 28 \times 28 - \frac{1}{2} \times 28 \times 28$

= 616 - 392

= 224 cm^2

∴ Area of the major segment ADB

= Area of circle - area of minor segment

$= \pi r^2 - 224 = \frac{22}{7} \times 28 \times 28 - 224$

= 2464 - 224

= 2240 sq. cm

14.

(b) $\sqrt{3\pi}$ cm

Explanation:

Let the length of side of square be x cm

Then area of square = x^2 cm^2

Area of sector of circle

$= \frac{\theta}{360^\circ} \times \pi r^2$

$= \frac{90^\circ}{360^\circ} \times \pi r^2$ [∵ angle of square = $\theta = 90^o$]

∴ Shaded area = $\frac{\pi \times 4}{4} = \pi$

According to question, Area of square = 3 × shaded area

$\Rightarrow 3\pi = x^2$ ∴ x = $\sqrt{3\pi}$ cm

15.

(c) $\frac{1}{3}$

Explanation:

Total number of pieces = 8 triangles + 10 squares = 18

Number of blue squares = 6

Number of possible outcomes = 6

Number of total outcomes = 8 + 10 = 18

∴ Required Probability = $\frac{6}{18} = \frac{1}{3}$

16.

(c) 9

Explanation:

Mean of n natural numbers = $\frac{5n}{9}$

$\Rightarrow \frac{n(n+1)}{2n} = \frac{5n}{9}$ ...{∵ Sum of first natural numbers = $\frac{n(n+1)}{2}$}

$\Rightarrow \frac{n+1}{2} = \frac{5n}{9} \Rightarrow$ 10n = 9n + 9

$\Rightarrow$ 10n - 9n = 9

$\Rightarrow$ n = 9

$\therefore$ n = 9

17.

(c) 616 cm^3

Explanation:

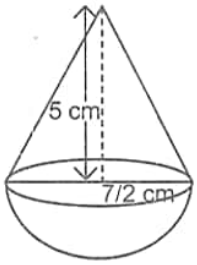

Volume of water in the cylindrical tub = Volume of the tub

$= \pi r^2 h = \left(\frac{22}{7} \times 5 \times 5 \times 9.8\right)$ cm^3 = 770 cm^3

Volume of the solid immersed in the tub = Volume of the hemisphere + Volume of the cone

$= \left[\left(\frac{2}{3} \times \frac{22}{7} \times \frac{7}{2} \times \frac{7}{2} \times \frac{7}{2}\right) + \left(\frac{1}{3} \times \frac{22}{7} \times \frac{7}{2} \times \frac{7}{2} \times 5\right)\right]$ cm^3

$= \left(\frac{539}{6} + \frac{385}{6}\right) cm^3 = \left(\frac{924}{6}\right) cm^3$ = 154 cm^3

Volume of water left in the tub = Volume of the tub - Volume of solid immersed

= (770 - 154) cm^3 = 616 cm^3

18.

(b) 62

Explanation:

$\overline{x} = a + \frac{\sum f_i u_i}{\sum f_i} \times h$

$= 47.5 + \frac{29}{30} \times 15$

$= 47.5 + \frac{29}{2}$

= 47.5 + 14.5

= 62

19.

(b) Both A and R are true but R is not the correct explanation of A.

Explanation:

Using section formula, we have

$-1 = \frac{k \times 6 + 1 \times (-3)}{k+1}$

-k - 1 = 6k - 3

7k = 2

$k = \frac{2}{7}$

Ratio is 2 : 7 internally.

Also, if ar($\triangle$ABC) = 0

A, B and C all these points are collinear.

20.

(d) A is false but R is true.

Explanation:

A is false but R is true.

Section B

21. Given equations are

6x – 3y + 10 = 0

2x – y + 9 = 0

Comparing equation 6x – 3y + 10 = 0 with $a_1x + b_1y + c_1 = 0$

and $2x - y + 9 = 0$ with

$a_2x + b_2y + c_2 = 0$,

We get, a_1 = 6, b_1 = -3, c_1 = 10, a_2 = 2, b_2 = -1, c_2 = 9

We have $\frac{a_1}{a_2} = \frac{b_1}{b_2} \neq \frac{c_1}{c_2}$ because $\frac{6}{2} = \frac{-3}{-1} \neq \frac{10}{9} \Rightarrow \frac{3}{1} = \frac{3}{1} \neq \frac{10}{9}$

Hence, lines are parallel to each other.

22.

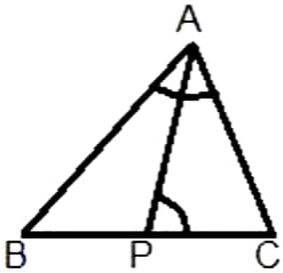

$\angle APC = \angle BAC$

$\angle ACP = \angle ACB$

$\therefore \triangle APC \sim \triangle BAC$

$AC^2 = BC.CP$

OR

In $\triangle QSM$ and $\triangle PTM$

$\angle QSM = \angle PTM \left(\text{ each } 90^\circ \right)$

$\angle QMS = \angle PMT(\text{ vertically opposite angles })$

$\therefore \Delta QSM \sim \Delta PTM(\text{ AA criteria })$

23.

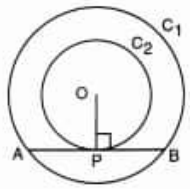

In larger circle C1 , AB is the chord and OP is the tangent.

Therefore, $\angle OPB = 90^\circ$

Hence, AP = PB (perpendicular from center of the circle to the chord bisects the chord)

24. Taking L.H.S. $x^2 + y^2 = (3\sin\theta + 4\cos\theta)^2 + (3\cos\theta - 4\sin\theta)^2$

$= 9\sin^2\theta + 16\cos^2\theta + 2 \times 3\sin\theta \times 4\cos\theta \ + 9\cos^2\theta + 16\sin^2\theta - 2 \times 3\cos\theta \times 4\sin\theta$

$= 9\left(\sin^2\theta + \cos^2\theta\right) \ + 16\left(\cos^2\theta + \sin^2\theta\right)$

$= 9 \times 1 + 16 \times 1 \left[\because \sin^2\theta + \cos^2\theta = 1\right]$

= 9 + 16

= 25 = R.H.S

Hence proved.

25. Radius of each wiper = 25cm, Angle = 115°

$\therefore \theta$ = 115°

Total area cleaned at each sweep of the blades

$= 2\left[\frac{115}{360} \times \frac{22}{7} \times 25 \times 25\right] \left(\because \text{ Area } = \frac{\theta}{360}\pi r^2\right)$

$= \frac{230 \times 22 \times 5 \times 25}{72 \times 7}$

$= \frac{230 \times 11 \times 125}{36 \times 7}$

$= \frac{115 \times 11 \times 125}{18 \times 7}$

$= \frac{158125}{126} \text{cm}^2$

$= 1254.96 \text{cm}^2$

OR

Area of first sector = $\left(\frac{1}{2}\right)(r_1)^2\theta_1$,

where r1 is the radius,

θ_1 is the angle in radians subtended by the arc at the center of the circle.

Area of second sector = $\left(\frac{1}{2}\right)(r_2)^2\theta_2$

where r_2 is the radius,

θ_2 is the angle in radians subtended by the arc at the centrer of the circle.

Given that: $\left(\frac{1}{2}\right)(r_1)^2\theta_1 = \left(\frac{1}{2}\right)(r_2)^2\theta_2$

$\Rightarrow (r_1)^2\theta_1 = (r_2)^2\theta_2$

It depends on both radius and angle subtended at the center. But arc length only depends on radius of the circle. Therefore, it is not necessary that the corresponding arc lengths are equal. It is possible only if corresponding angles are equal (because then, the corresponding radii will be equal and hence the arc lengths will be equal).

Section C

26. By taking LCM of time taken (in minutes) by Sonia and Ravi, We can get the actual number of minutes after which they meet again at the starting point after both start at the same point and at the same time, and go in the same direction.

$18 = 2 \times 3 \times 3 = 2 \times 3^2$

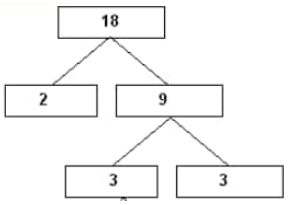

$12 = 2 \times 2 \times 3 = 2^2 \times 3$

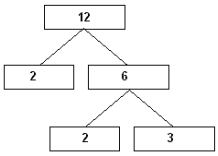

LCM $(18, 12) = 2^2 \times 3^2 = 36$

Therefore, both Sonia and Ravi will meet again at the starting point after 36 minutes.

27. Let the coordinates of A be (x, y) which lies on line joining P(6, -6) and Q (-4, -1)

such that $\frac{\text{PA}}{\text{PQ}} = \frac{2}{5}$

$\Rightarrow \frac{\text{PA}}{\text{PQ}-\text{PA}} = \frac{2}{5-2}$

$\Rightarrow \frac{\text{PA}}{\text{AQ}} = \frac{2}{3}$

$\Rightarrow \text{PA} : \text{AQ} = 2 : 3$

Now by section formula x and y becomes as shown below

Since, P(6, -6) and Q(-4, -1)

$\therefore x = \frac{mx_2+nx_1}{m+n} = \frac{2(-4)+3\times6}{2+3}$

$= \frac{-8+18}{5} = \frac{10}{5} = 2$

$y = \frac{my_2+ny_1}{m+n} = \frac{2\times(-1)+3(-6)}{2+3}$

$= \frac{-2-18}{5} = \frac{-20}{5} = -4$

Therefore Coordinates of A are (2, -4). As A lies on line segment joining the points P and Q so it must satisfy equation of line segment.

Therefore Substituting the value of x and y i.e; value of A (2,-4) in 3x + k(y + 1) =0

$\Rightarrow 3 \times 2 + k(-4 + 1) = 0 \Rightarrow 6 - 3k = 0$

$\Rightarrow 3k = 6 \Rightarrow k = \frac{6}{3} = 2$

28. Let us denote the incomes of the two-person by ₹ 9x and ₹ 7x and their expenditures by ₹ 4y and ₹ 3y respectively.

Then the equations formed in the situation is given by :

9x – 4y = 2000 ...(i)

and 7x – 3y = 2000 ...(2)

Step 1: Multiply Equation (1) by 3 and Equation (2) by 4 to make the coefficients of y equal. Then, we get the equations:

27x – 12y = 6000 ...(3)

28x – 12y = 8000 ...(4)

Step 2: Subtract Equation (3) from Equation (4) to eliminate y, because the coefficients of y are the same. So, we get

(28x – 27x) – (12y – 12y) = 8000 – 6000

i.e., x = 2000

Step 3: Substituting this value of x in (1), we get

9(2000) – 4y = 2000

i.e., y = 4000

So, the solution of the equations is x = 2000, y = 4000. Therefore, the monthly incomes of the persons are ₹18,000 and ₹14,000 respectively.

OR

Let the greater numbers be 'x' and the smaller number 'y'.

It is said that half the difference between the two numbers is 2. So, we can write it as;

$\frac{1}{2} \times (x - y) = 2$

$\Rightarrow (x - y) = 4$ ...(1)

It is also said that the sum of the greater number and twice the smaller number is 13. So, we can write it as;

x + 2y = 13 ...(2)

Subtracting (2) from (1), we get;

(x - y) - (x + 2y) = 4 - 13

$\Rightarrow$ x - y - x - 2y = - 9

$\Rightarrow$ -3y = -9

$\Rightarrow y = \frac{9}{3}$

$\Rightarrow$ y = 3

Putting y = 3 in (1), we get;

x - y = 4

$\Rightarrow$ x - 3 = 4

$\Rightarrow$ x = 4 + 3

$\Rightarrow$ x = 7

Hence, the greater number is 7. The smaller number is 3.

29. According to the question, XY and X 'Y ' are x two parallel tangents to a circle with centre O and another tangent AB with point of contact C intersects XY at A and X 'Y ' at B.

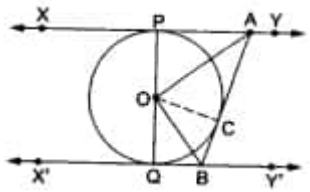

In quad. APQB, we have

$\angle APO$ =90°

and $\angle BQO$ = 90° [$\because$ tangent at any point is perpendicular to the radius through the point of

contact]

Now, $\angle APO + \angle BQO + \angle QBC + \angle PAC = 360^\circ$

$\Rightarrow \angle PAC + \angle QBC = 360^\circ - (\angle APO + \angle BQO) = 180^\circ$ ...(i)

We have,

$\angle CAO = \frac{1}{2}\ \angle PAC$

and $\angle CBO = \frac{1}{2}\angle QBC$ [$\because$ tangents from an external point are equally inclined to the line segment joining the centre to that point]

$\therefore \angle \text{CAO} + \angle \text{CBO} = \frac{1}{2}(\angle PAC + \angle QBC) = \frac{1}{2} \times 180^\circ = 90^\circ$ .....(ii)

In $\triangle AOB$, we have

$\angle CAO + \angle AOB + \angle CBO = 180^\circ$

$\Rightarrow 90^\circ + \angle AOB = 180^\circ$

$\Rightarrow \quad \angle AOB = 90^\circ$

30. We have to prove that, $\frac{\sin\theta - \cos\theta + 1}{\sin\theta + \cos\theta - 1} = \frac{1}{\sec\theta - \tan\theta}$ using identity $sec^2\theta = 1 + tan^2\theta$

LHS = $\frac{\sin\theta - \cos\theta + 1}{\sin\theta + \cos\theta - 1} = \frac{\tan\theta - 1 + \sec\theta}{\tan\theta + 1 - \sec\theta}$ [dividing the numerator and denominator by $\cos\theta$.]

$= \frac{(\tan\theta + \sec\theta) - 1}{(\tan\theta - \sec\theta) + 1} = \frac{\{(\tan\theta + \sec\theta) - 1\}(tan\theta - \sec\theta)}{\{(\tan\theta - \sec\theta) + 1\}(\tan\theta - \sec\theta)}$ [Multiplying and dividing by $(\tan\theta - \sec\theta)$]

$= \frac{(\tan^2\theta - \sec^2\theta) - (tan\theta - \sec\theta)}{\{(\tan\theta - \sec\theta) + 1\}(\tan\theta - \sec\theta)}$ [$\because (a-b)(a+b) = a^2 - b^2$]

$= \frac{-1 - \tan\theta + \sec\theta}{(\tan\theta - \sec\theta + 1)(\tan\theta - \sec\theta)}$ [$\because \tan^2\theta - \sec^2\theta = -1$]

$= \frac{-(\tan\theta - \sec\theta + 1)}{(\tan\theta - \sec\theta + 1)(\tan\theta - \sec\theta)} = \frac{-1}{\tan\theta - \sec\theta}$

$= \frac{1}{\sec\theta - \tan\theta}$ **=RHS**

Hence Proved.

OR

We have,

$\text{LHS} = \frac{\tan\theta + \sec\theta - 1}{\tan\theta - \sec\theta + 1}$

$\Rightarrow \quad \text{LHS} = \frac{(\tan\theta + \sec\theta) - 1}{(\tan\theta - \sec\theta) + 1}$

$\Rightarrow \quad \text{LHS} = \frac{(\sec\theta + \tan\theta) - (\sec^2\theta - \tan^2\theta)}{\tan\theta - \sec\theta + 1}$ [$\because$ $\sec^2\theta$ - $\tan^2\theta$ = 1]

$\Rightarrow \quad \text{LHS} = \frac{(\sec\theta + \tan\theta) - (\sec\theta + \tan\theta)(\sec\theta - \tan\theta)}{\tan\theta - \sec\theta + 1}$

$\Rightarrow \quad \text{LHS} = \frac{(\sec\theta + \tan\theta)[1 - (\sec\theta - \tan\theta)]}{\tan\theta - \sec\theta + 1}$

$\Rightarrow \quad \text{LHS} = \frac{(\sec\theta + \tan\theta)(1 - \sec\theta + \tan\theta)}{(\tan\theta - \sec\theta + 1)}$

$\Rightarrow \quad \text{LHS} = \frac{(\sec\theta + \tan\theta)(\tan\theta - \sec\theta + 1)}{(\tan\theta - \sec\theta + 1)}$

$\Rightarrow \quad LHS = \sec\theta + \tan\theta = \frac{1}{\cos\theta} + \frac{\sin\theta}{\cos\theta} = \frac{1 + \sin\theta}{\cos\theta}$ = RHS

31. Total no. of possibilities are {1,2, 3 ... 99, 100}

So n=100

i. Number divisible by 9 and perfect square are {9, 36,81}

So m = 3

$\therefore$Required probability P = $\frac{m}{n} = \frac{3}{100}$

ii. Now the prime number more than 80 upto 100 are 83,89,97 .So m=3

Hence, the probability P= $\frac{m}{n} = \frac{3}{100}$

Section D

32. For real roots, $D \geq 0$

$[-2(p+1)]^2 - 4p^2 \geq 0$

$\Rightarrow p \geq -\frac{1}{2}$

$\therefore$ smallest value of $p = -\frac{1}{2}$

At $p = -\frac{1}{2}$ given equation becomes

$x^2 - 2\left(\frac{-1}{2} + 1\right)x + \left(\frac{-1}{2}\right)^2 = 0$

$x^2 - x + \frac{1}{4} = 0$ or $4x^2 - 4x + 1 = 0$

$(2x - 1)(2x - 1) = 0$

$\therefore$ roots are $\frac{1}{2}, \frac{1}{2}$

OR

We, $A = \left(c^2 - ab\right)$, B$= -2(a^2 - bc), C = b^2 - ac$

For real equal roots, $D = B^2 - 4AC = 0$

$\Rightarrow \quad \left[-2\left(a^2 - bc\right)\right]^2 - 4\left(c^2 - ab\right)\left(b^2 - ac\right) = 0$

$\Rightarrow 4\left(a^4 + b^2c^2 - 2a^2bc\right) - 4\left(b^2c^2 - c^3a - ab^3 - a^2bc\right) = 0$

$\Rightarrow 4\left[a^4 + b^2c^2 - 2x^2bc - b^2c^2 + c^3a + ab^3 - a^2bc\right) = 0$

$\Rightarrow 4\left[a^4 + ac^3 + ab^3 - 3a^2bc\right] = 0$

$\Rightarrow a\left(a^3 + c^3 + b^3 - 3abc\right) = 0$

$\Rightarrow a = 0$ or $a^3 + b^3 + c^3 = 3abc$

33.

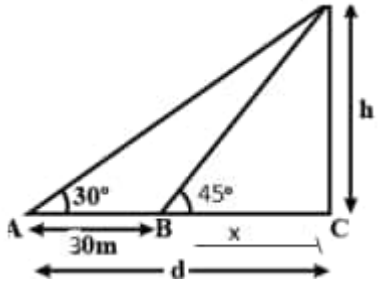

Let CD be the building

In $\triangle$DCA, tan 30° = $\frac{h}{x+30} \Rightarrow \frac{1}{\sqrt{3}} = \frac{h}{x+30}$ ...(i)

In $\triangle$DCB, tan 45° = $\frac{h}{x} \Rightarrow$ h = x ...(ii)

using equations (i) and (ii),

h = x = 15 ($\sqrt{3}$ + 1)

= 15 $\times$ 2.732 = 40.98 m

Height of building h = x = 40.98 m

Distance(d) of base from point A = x + 30 = 70.98 m

34. Here, (-4) + (-1) + 2 + 5 + ... + x = 437.

Now,

-1 - (-4) = -1 + 4 = 3

2 - (-1) = 2 + 1 = 3

5 - 2 = 3

Thus, this forms an A.P. with a = -4, d = 3, l = x

$S_n = \frac{n}{2}$[2a + (n - 1)d]

$\Rightarrow$ 437 = $\frac{n}{2}$ [2 $\times$ (-4) + (n - 1) $\times$ 3]

$\Rightarrow$ 874 = n[-8 + 3n - 3]

$\Rightarrow$ 874 = n[3n - 11]

$\Rightarrow$ 874 = $3n^2$ - 11n

$\Rightarrow$ $3n^2$ - 11n - 874 = 0

$\Rightarrow$ $3n^2$ - 57n + 46n - 874 = 0

$\Rightarrow$ 3n(n - 19) + 46(n - 19) = 0

$\Rightarrow$ 3n + 46 = 0 or n = 19

$\Rightarrow n = -\frac{46}{3}$ or n = 19

Numbers of terms cannot be negative or fraction.

$\Rightarrow$ n = 19

Now, $S_n = \frac{n}{2}[a + l]$

$\Rightarrow 437 = \frac{19}{2}$ [-4 + x]

$\Rightarrow$ -4 + x = $\frac{437 \times 2}{19}$

$\Rightarrow$ -4 + x = 46

$\Rightarrow$ x = 50

OR

Integers from 1 to 500 which are multiples of 2 are 2, 4, 6, 8.....

This forms an A.P., with a = 2, d = 2 and l = 500

Let the number of these terms be n.

Then,

a_n = 500

$\Rightarrow$a + (n - 1)d = 500

$\Rightarrow$2 + (n - 1)(2) = 500

$\Rightarrow$(n - 1)(2) = 498

$\Rightarrow$n - 1 = 249

$\Rightarrow$n = 250

$\Rightarrow S_{250} = \frac{250}{2}[2 \times 2 + 249 \times 2]$

$= 125 \times [4 + 498]$

$= 125 \times 502$

= 62750

Integers from 1 to 500 which are multiples of 5 are 5, 10, 15, 20,.....

This forms an A.P., with a = 5, d = 5 and l = 500

Let the number of these terms be n.

Then,

a_n = 500

$\Rightarrow$a + (n - 1)d = 500

$\Rightarrow$5 + (n - 1)(5) = 500

$\Rightarrow$(n - 1)(5) = 495

$\Rightarrow$n - 1 = 99

$\Rightarrow$n = 100

$\Rightarrow S_{100} = \frac{100}{2}[2 \times 5 + 99 \times 5]$

$= 50 \times [10 + 495]$

$= 50 \times 505$

= 25250

Again, multiples of 10 are included in both i.e., multiple of 2 and multiple of 5 also.

Integers from 1 to 500 which are multiples of 10 are 10, 20....., 500

This forms an A.P., with a = 10, d = 10 and l = 500

Let the number of these terms be n.

Then,

a_n = 500

$\Rightarrow$a + (n - 1)d = 500

$\Rightarrow$10 + (n - 1)(10) = 500

$\Rightarrow$(n - 1)(10) = 490

$\Rightarrow$n - 1 = 49

$\Rightarrow$n = 50

$\Rightarrow S_{50} = \frac{50}{2}[2 \times 10 + 49 \times 10]$

$= 25 \times [20 + 490]$

$= 25 \times 510$

= 12750

Now, Sum of all integers from 1 to 500 which are multiples of 2 or 5

= (Sum of all integers from 1 to 500 which are multiples of 2 + Sum of all integers from 1 to 500 which are multiples of 5 -Sum of all integers from 1 to 500 which are multiples of 2 and 5)

= 62750 + 25250 - 12750

= 75250

35.

Life time	**Number of lamps (f_i)**	**Cumulative frequency**
1500-2000	14	14
2000-2500	56	14 + 56 = 70
2500-300	60	70 + 60 = 130
3000-3500	86	130 + 86 = 216
3500-4000	74	216 + 74 = 290
4000-4500	62	290 + 62 = 352
4500-5000	48	352 + 48 = 400
	400	

N = 400

Now we may observe that cumulative frequency just greater than $\frac{n}{2}$ (ie., $\frac{400}{2}$ = 200) is 216

Median class = 3000 - 3500

Median = l + $\left(\frac{\frac{n}{2} - cf}{f}\right) \times$ h

Here,

l = Lower limit of median class

F = Cumulative frequency of class prior to median class.

f = Frequency of median class.

h = Class size.

Lower limit (l) of median class = 3000

Frequency (f) of median class 86

Cumulative frequency (cf) of class preceding median class = 130

Class size (h) = 500

Median = 3000 + $\left(\frac{200-130}{86}\right) \times 500$

= 3000 + $\frac{70 \times 500}{86}$

= 3406.98

Section E

36. i. Curved surface area of cone

= πrl

= $\frac{22}{7} \times$ 21 x29 = 1914 m^2

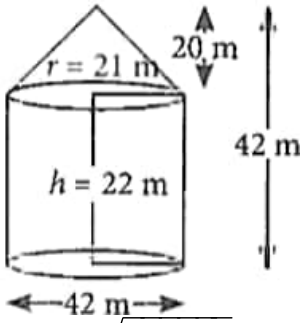

[$\because l = \sqrt{r^2 + h_1^2} = \sqrt{(21)^2 + (20)^2} = \sqrt{841} = 29$ m]

ii. Area of floor = πr^2

$= \frac{22}{7} \times 21 \times 21 = 1386$ m^2

Number of persons that can be accommodated in the tent = $\frac{1386}{126} = 11$

iii. Curved surface area of cylinder

$= 2\pi rh$

$= \frac{22}{7} \times 21$ x 44 = 2904 m^2

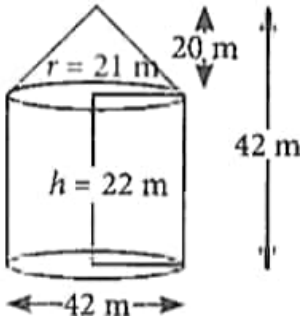

OR

Required area of canvas = Curved surface area of cone + Curved surface area of cylinder

$= \pi rl + 2\pi rh = \pi r (l + 2h)$

$= \frac{22}{7} \times 21 (29 + 44) = 4818$ m^2

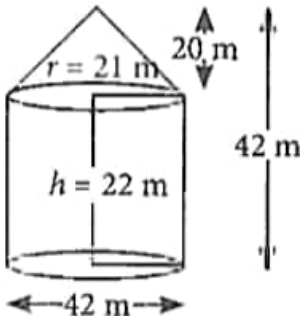

37. i. 2

ii. 81.2 m

iii. quadratic polynomial

OR

(x - 3) and (x - 2)

38. i. Figures A and C are similar.

ii. Only Figure C is congruent.

iii. All congruent figures are similar but all similar figures are not congruent.

For example, a pair of triangles that are similar by the A.A.A. test of similarity are not congruent pairs of triangles since the exact lengths of the sides are unknown.

In $\triangle ABC$ and $\triangle DEF$,

$\angle A = \angle D = 50^o$,

$\angle B = \angle E = 75^o$

and $\angle C = \angle F = 55^o$.

Hence, $\triangle ABC \sim \triangle DEF$ but they are not congruent.

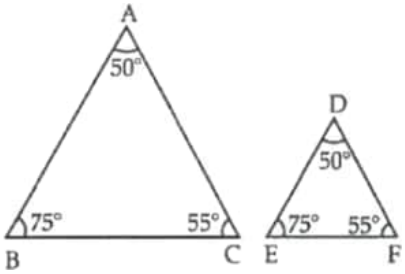

OR

The length of corresponding sides must be equal.